NPN SILICON RF POWER TRANSISTOR

DESCRIPTION:

The **ASI 2N6439** is a Common Emitter Device Designed For Large signal output amplifier stages in the 225-400 MHz range.

FEATURES INCLUDE:

- Internal Input Matching Network
- **30:1** Load VSWR Capability
- All Gold Metalization

MAXIMUM RATINGS

V_{CB}	60 V
P_{DISS}	146 W @ T_C = 25 °C
T_{STG}	-65 °C to +200 °C
θ_{JC}	1.2 °C/W

PACKAGE STYLE .500 6L FLG

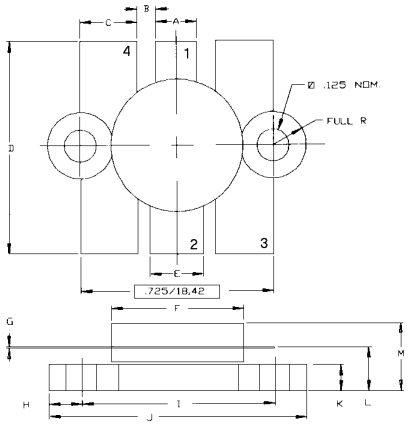

1 = Collector 2 = Base
3 & 4 = Emitter

	MINIMUM Inches/mm	MAXIMUM Inches/mm
A	.150/3,43	.160/4,06
B	.045/1,14	
C	.210/5,33	.220/5,59
D	.835/21,21	.865/21,97
E	.200/5,08	.210/5,33
F	.490/12,45	.510/12,95
G	.003/0,08	.007/0,18
H	.125/3,18	
I	.720/18,29	.730/18,54
J	.970/24,64	.980/24,89
K	.095/2,41	.105/2,67
L	.150/3,81	.170/4,32
M		.280/7,11

CHARACTERISTICS T_C = 25 °C

SYMBOL	TEST CONDITIONS			MINIMUM	TYPICAL	MAXIMUM	UNITS
BV_{CBO}	I_C = 50 mA			33			**V**
BV_{CES}	I_C = 50 mA			60			**V**
BV_{CBO}	I_E = 5.0 mA			4.0			**V**
h_{FE}	V_{CE} = 5.0 V	I_C = 1.0 A		10		100	**---**
C_{OB}	V_{CB} = 28 V		f = 1 MHz		67	75	**pF**
G_{Pe}	V_{CE} = 28 V	P_{OUT} = 60 W	f =225- 400 MHz	7.8	8.5		
G_{Pe}				7.8	10.0		**dB**
η_C	V_{CE} = 28 V	P_{OUT} = 60 W	f = 400 MHz	55			**%**
Ψ				30:1			**---**

ADVANCED SEMICONDUCTOR, INC.
7525 ETHEL AVENUE • NORTH HOLLYWOOD, CA 91605 • (818) 982-1200 • FAX (818) 765-3004

Specifications are subject to change without notice.