# TMX L011

SAW Bandpass Filter
US PCS Rx -IF

***SPECIFICATION***



**All performances include Temperature Variations & Matching Elements Tolerances**

| | | Minimum | Typical | Maximum |
|---|---|---|---|---|
| **Source Impedance (balanced or single)** | Ω | - | 50 | - |
| **Load Impedance (balanced or single)** | Ω | - | 500 | - |
| **Operating Temperature Range** | °C | -30 | | +80 |
| **Center Frequency** | MHz | - | 210.38 | - |
| **Template on the amplitude centered at 210.38 MHz** | | | | |
| **Bandwidth at -5 dB** | MHz | ± 0.630 | ± 0.790 | |
| **Bandwidth at -34 dB** | MHz | - | ± 1.14 | ± 1.25 |
| **Bandwidth at -36 dB** | MHz | - | ± 1.16 | ± 1.55 |
| **At fo ± 1.25 MHz** | dB | 35 | 45 | - |
| **Ultimate Rejection from 140 MHz to 206 MHz** | dB | 38 | 42 | - |
| **from 214.76 MHz to 280 MHz** | dB | 38 | 42 | - |
| **Insertion Loss at fo** | dB | - | 8,5 | 11.0(1) |
| **Amplitude Ripple within fo ± 0.30 MHz** | dB | - | 0.5 | 1.3(1) |
| **Phase Variation within fo ± 0.63 MHz** | °rms | - | 2.0 | 3.75(1) |
| **Package type & size** | | | SMP - 03 | |
| **Length x Width** | mm² | - | 7 x 5 | - |
| **Height** | mm | - | 1.6 | 1.8 |

| **Pin Out** | | | |
|---|---|---|---|
| **Input** | 1 | **Output (+)** | 5 |
| **Input Ground** | 10 | **Output (-)** | 6 |
| **Shield** | 3, 8 | | |
| **Case Ground** | 2, 4, 7, 9 | **To Be Grounded** | 2, 3, 4, 7, 8, 9 |

**Note :**
(1) With No Time Gating

**Matching Network for 50 Ω Single Ended / 500 Ω Balanced Drive Configuration**

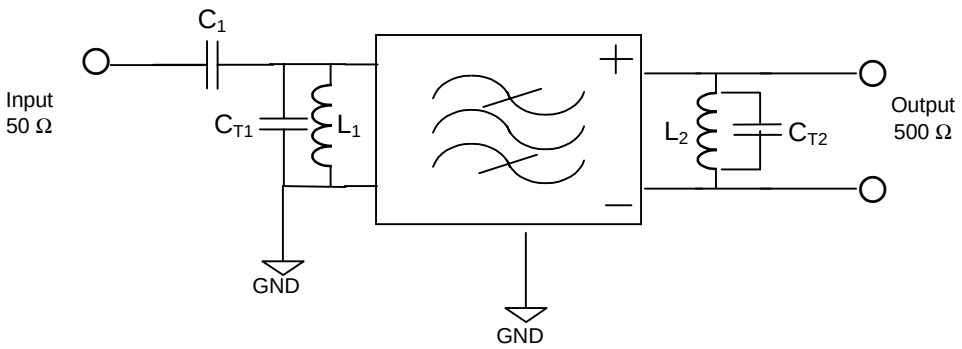


| *Thomson Microsonics Test Fixture* | *Customer PC Board* |
|---|---|
| $L_1$ = 27 nH, Q > 50<br>$C_1$ = 5.1 pf<br>$C_{T1}$= 1.9 pf | $L_1$ = TBD ± 2%, Q > 50<br>$C_1$ = TBD ± 5% |
| $L_2$ = 56 nH, Q > 50<br>$C_{T2}$ = 0.4 pf | $L_2$ = TBD ± 2%, Q > 50 |

$C_{T1}$ and $C_{T2}$ = Tuning capacitors for Inductors ($L_1$/$L_2$) adjustment
TBD = To Be Defined on Customer PC Board

N. BUTEAU : nicolas.buteau@tmx.thomson-csf.com

THOMSON MICROSONICS



All information contained in this document remains the sole and exclusive property of THOMSON MICROSONICS and shall not be disclosed by the recipient to third party without the prior consent of THOMSON MICROSONICS.

# Typical S21 Response

**References**

| | | |
|---|---|---|
| CENTER FREQUENCY | = 210.38 | MHz |
| LOSS REFERENCE | = 8.04 | dB |
| DELAY REFERENCE | = 0.88 | µs |
| PHASE REFERENCE | = 134.86 | deg |

**Scales**

| | | |
|---|---|---|
| SCALE_ FREQUENCY | = 1 | MHz/div |
| SCALE_ AMPLITUDE | = 10 | dB/div |

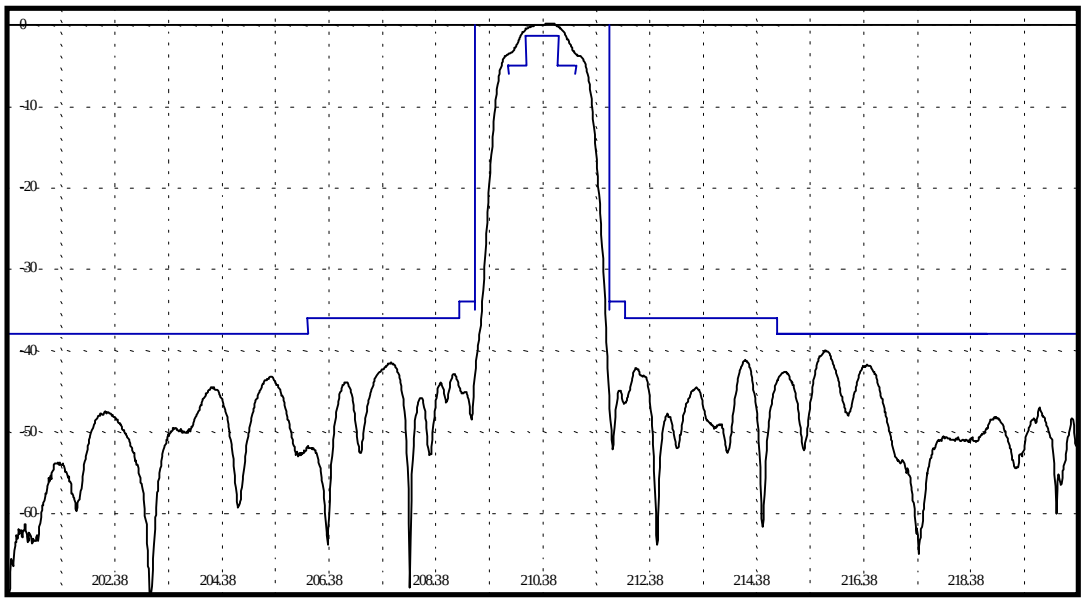


**References**

| | | |
|---|---|---|
| CENTER FREQUENCY | = 210.38 | MHz |
| LOSS REFERENCE | = 7.94 | dB |
| DELAY REFERENCE | = 0.88 | µs |
| PHASE REFERENCE | = 134.86 | deg |

**Scales**

| | | |
|---|---|---|
| SCALE_ FREQUENCY | = 0.2 | MHz/div |
| SCALE_ AMPLITUDE | = 1 | dB/div |
| SCALE_ PHASE | = 10 | deg/div |

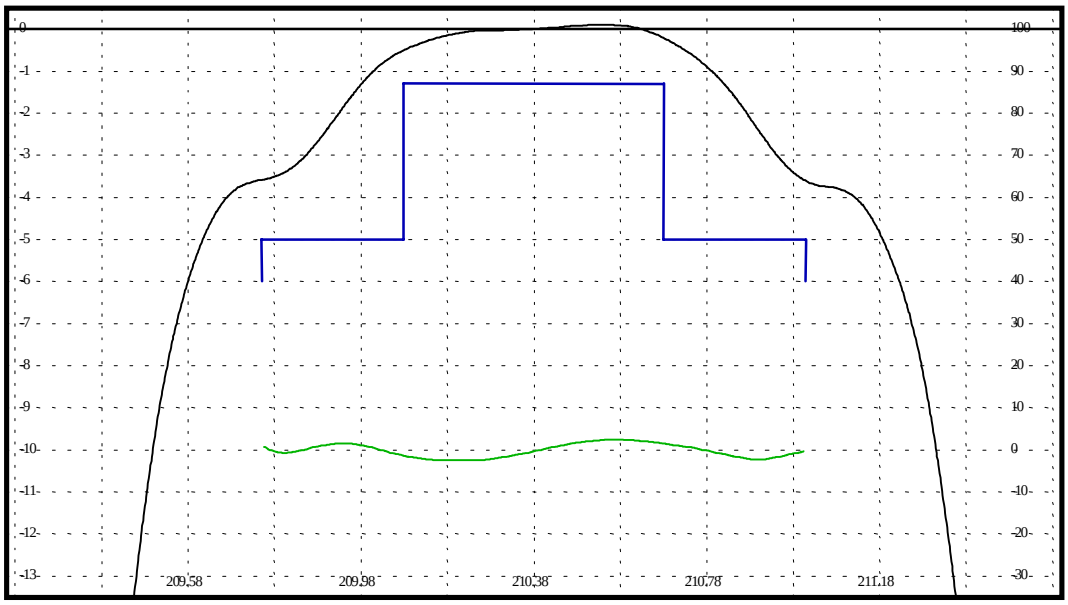


N. BUTEAU : nicolas.buteau@tmx.thomson-csf.com



All information contained in this document remains the sole and exclusive property of THOMSON MICROSONICS and shall not be disclosed by the recipient to third party without the prior consent of THOMSON MICROSONICS.